FITA 1

Miguel Ángel Ciganda, 2000

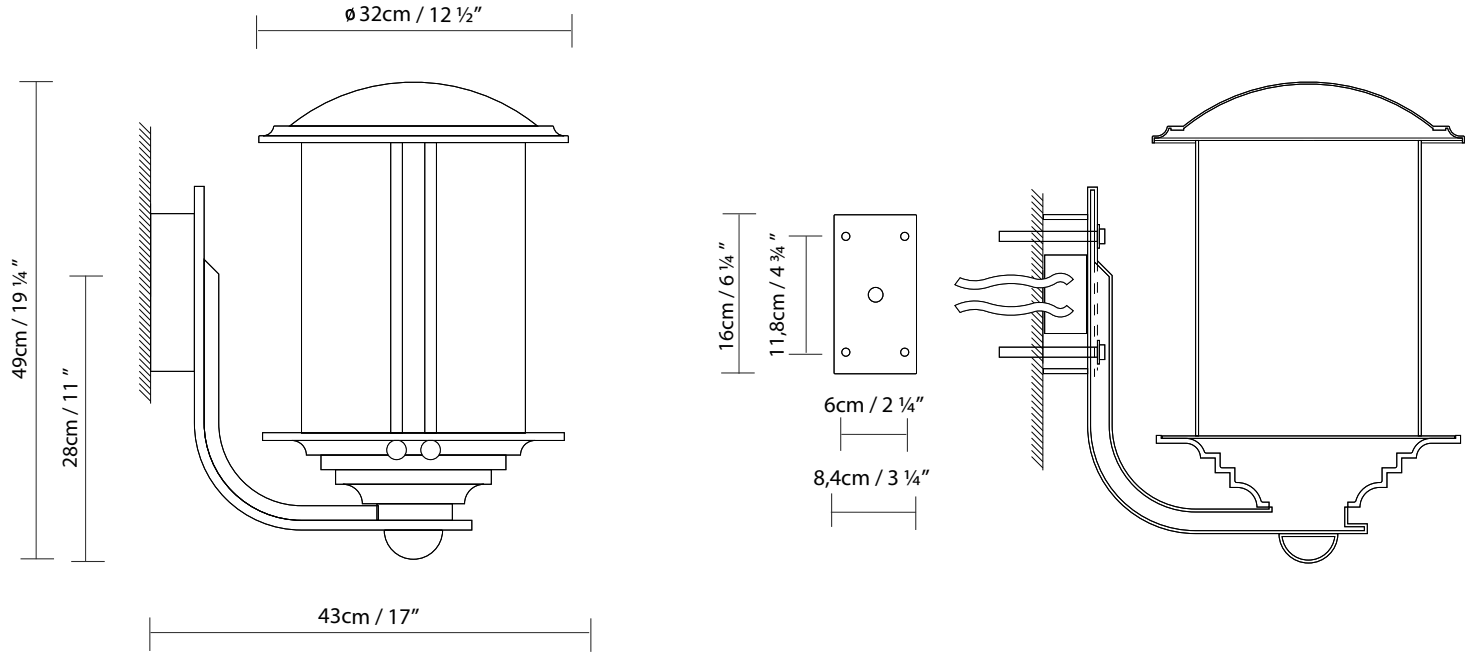

FITA 2

Miguel Ángel Ciganda, 2000

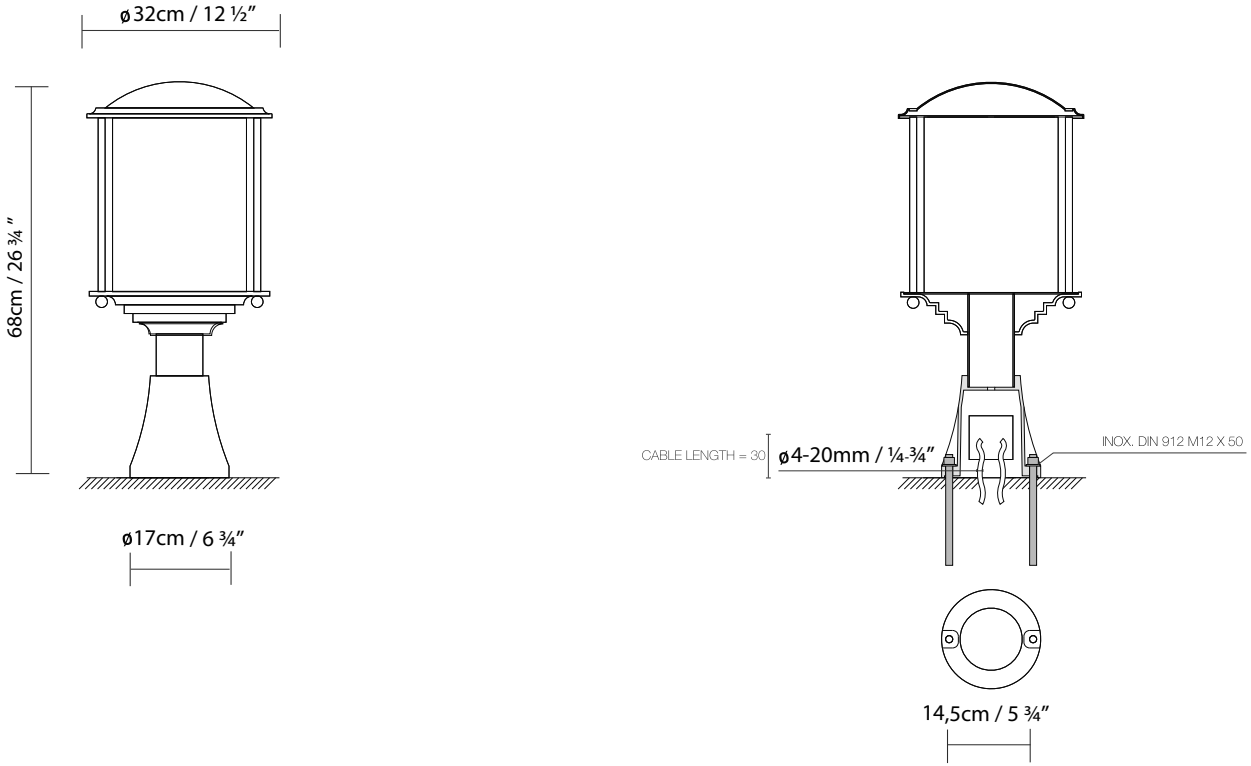

FITA 3
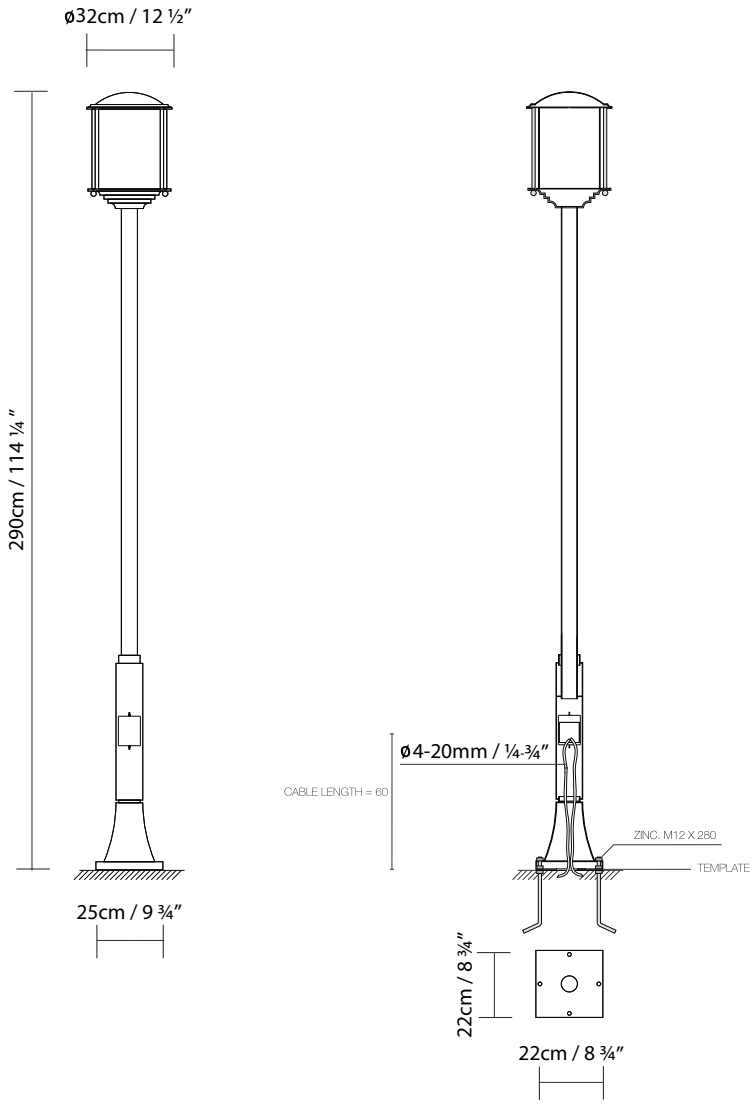
Miguel Ángel Ciganda, 2000