BLOK C10 ORIENTABLE
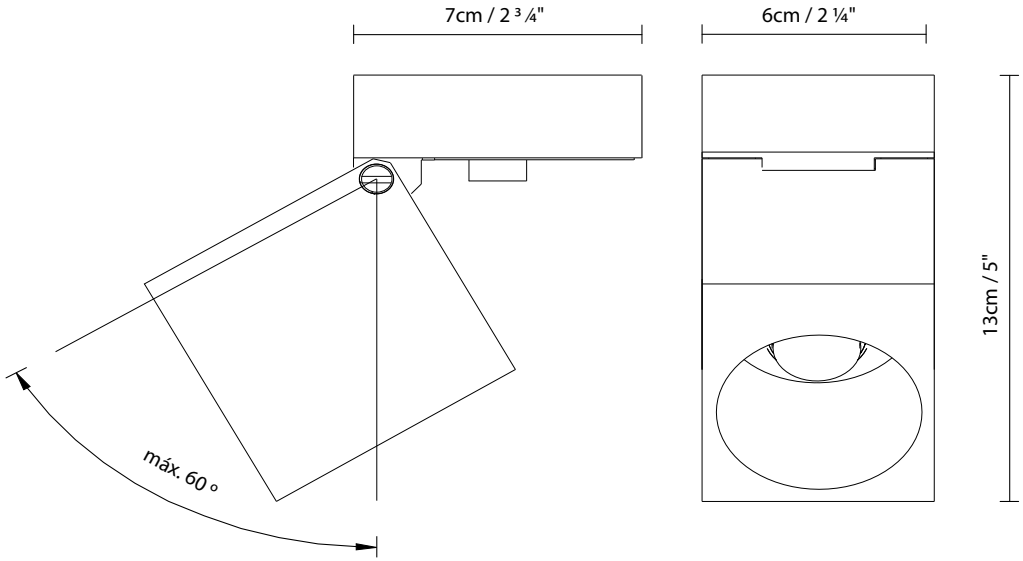
David Abad, 2003