HOODIE C / W
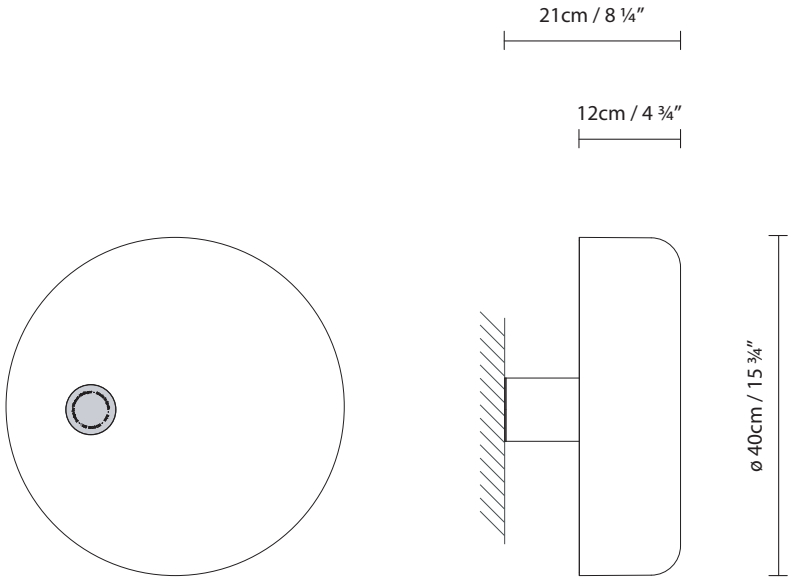
Werner Aisslinger, 2013