BLUEBIRD T
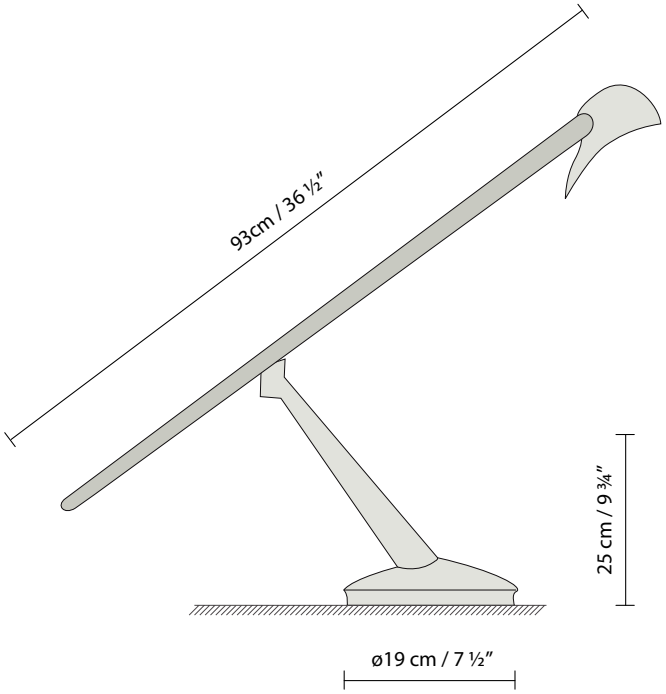
Jorge Pensi, 1990