C_BALL T
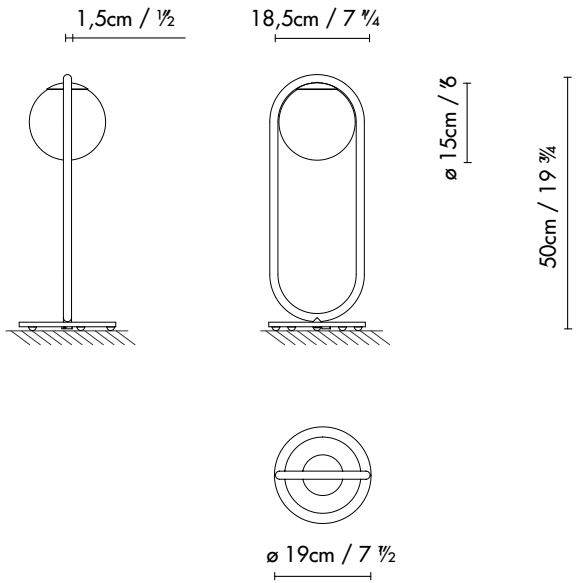
Stone Designs, 2015